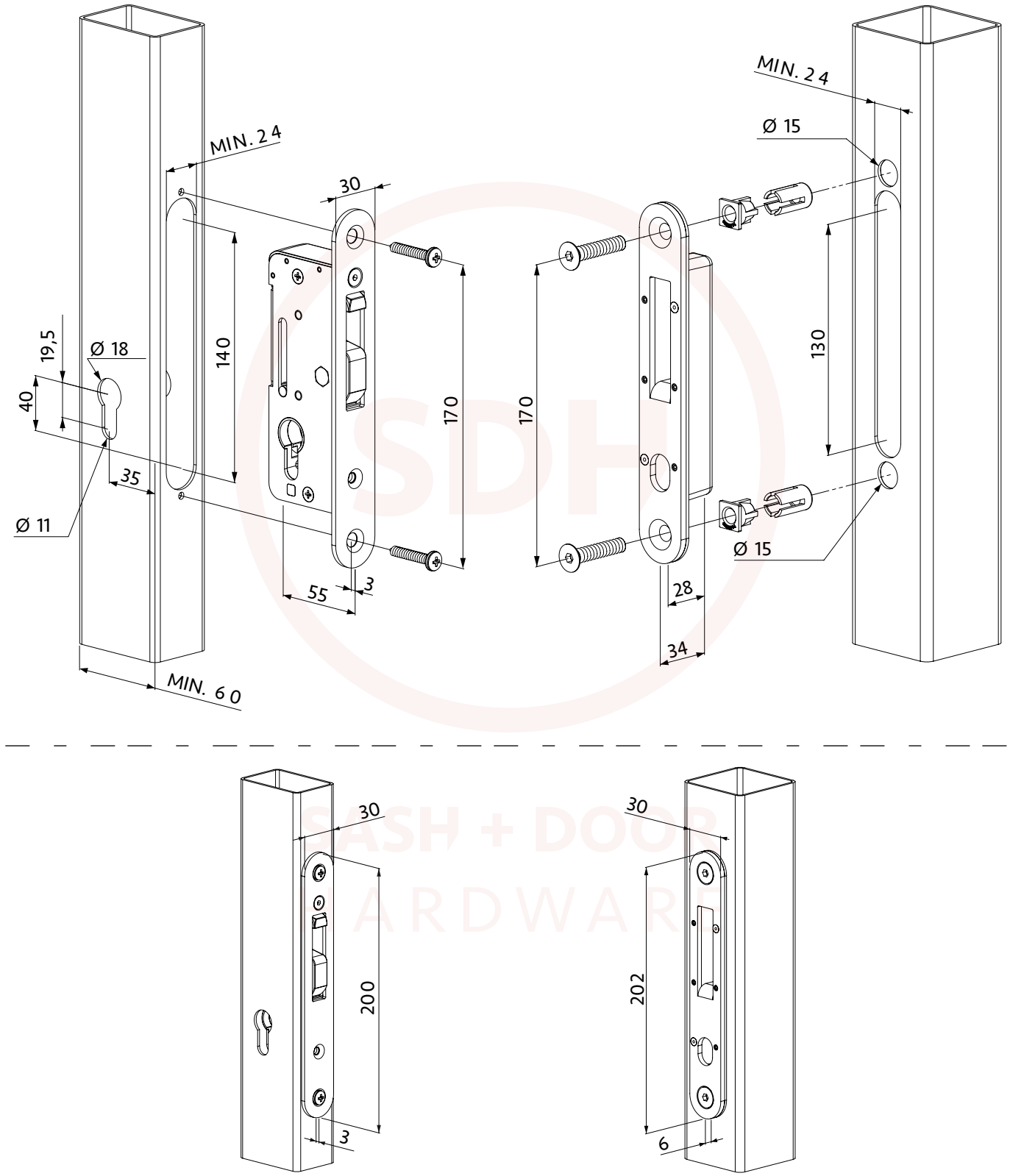SOX Patio Door Hook Lock